General instructions
for an exemplary LED extrusion

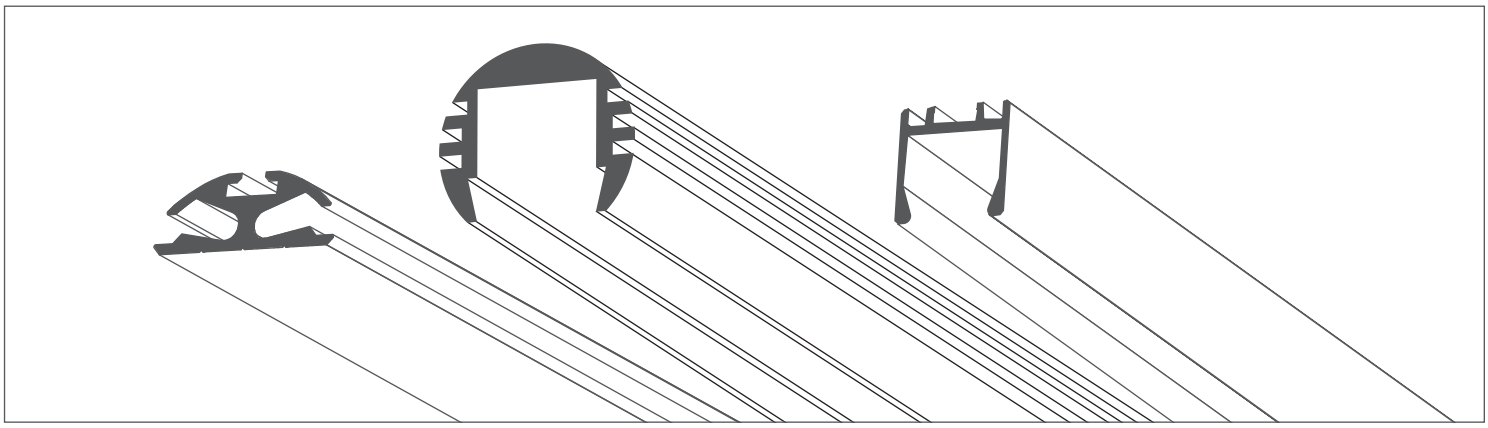

Spis treści / Table of contents

1. Before cutting the extrusion with the cover, secure the cutting point with self-adhesive tape.

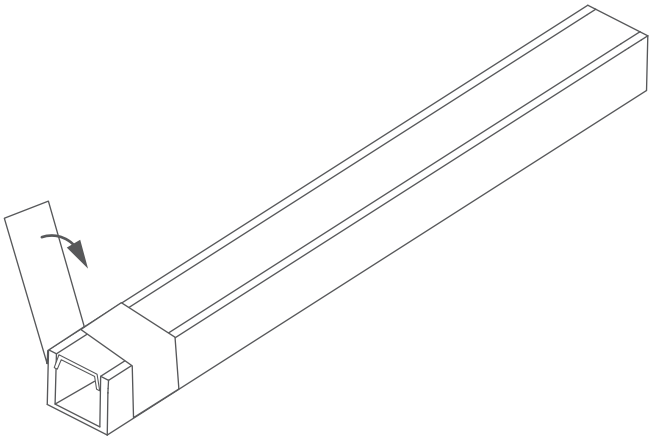

2. Use a mechanical saw to cut.
NOTE! It is recommended that the cover be cut 2 mm shorter than the extrusion to account for its thermal expansion.

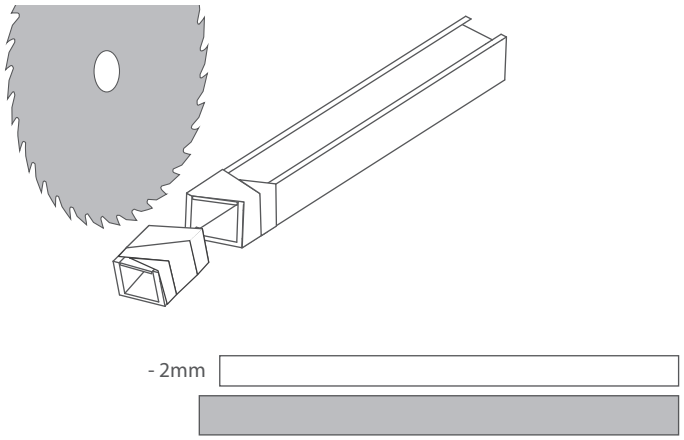

NOTE! Low precision cutting of the extrusion and cover can be done with a hand saw, however, uneven, jagged edges will remain, and the covers may break.

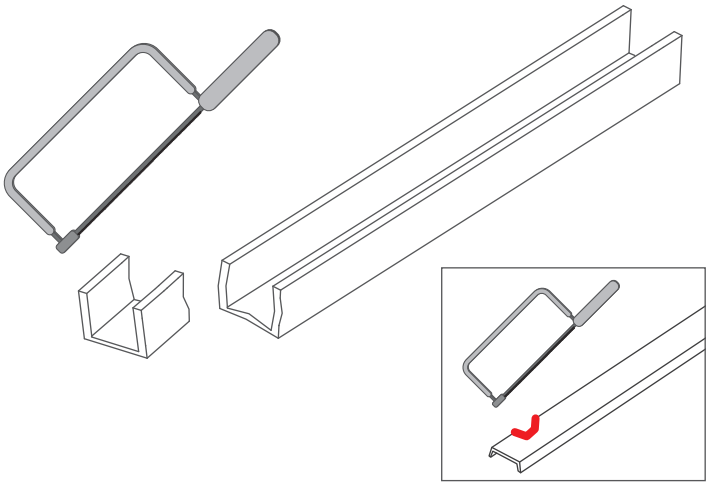

NOTE! For some extrusions there are dedicated end caps that require adequate shortening of the cover.

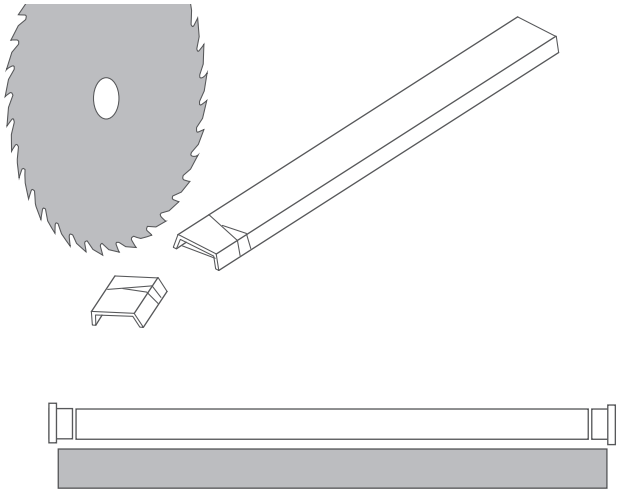

3. Drill a hole in the extrusion in the selected place.
NOTE! Make sure that there are no burrs around the hole after drilling as they can damage the LED strip or cable.

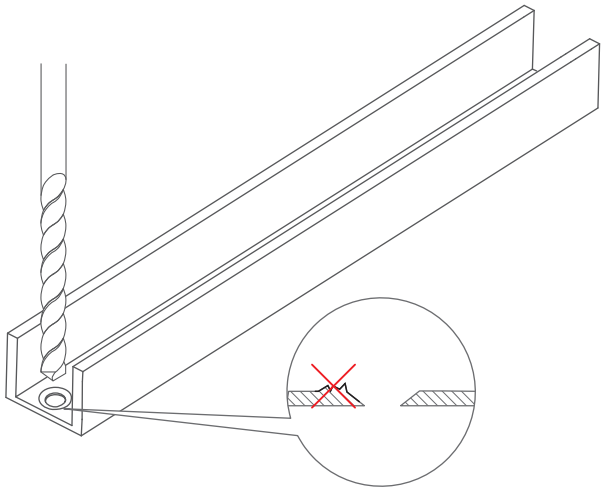

NOTE! Some extrusions feature one or more special grooves that make it easier to start drilling.

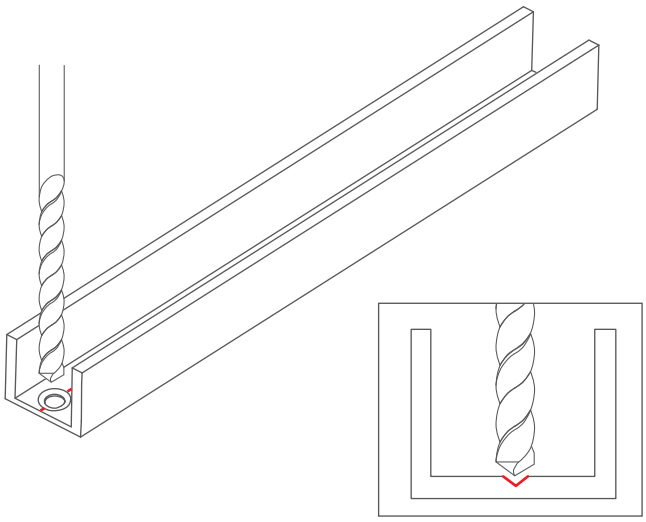

1. Remove the protective layer of the LED strip.

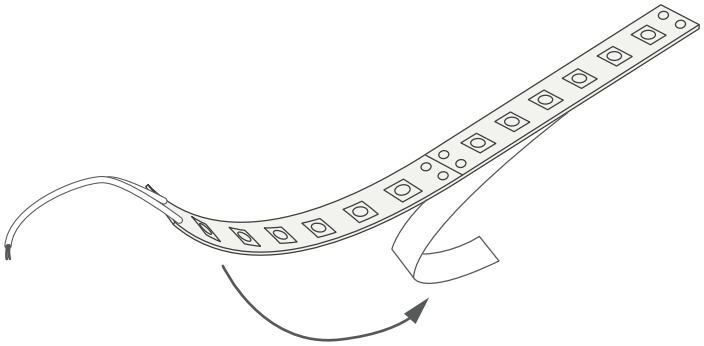

2. Attach the tape in the extrusion using the adhesive provided on the LED strip.
NOTE! The tape must not be bent or peel off the surface.

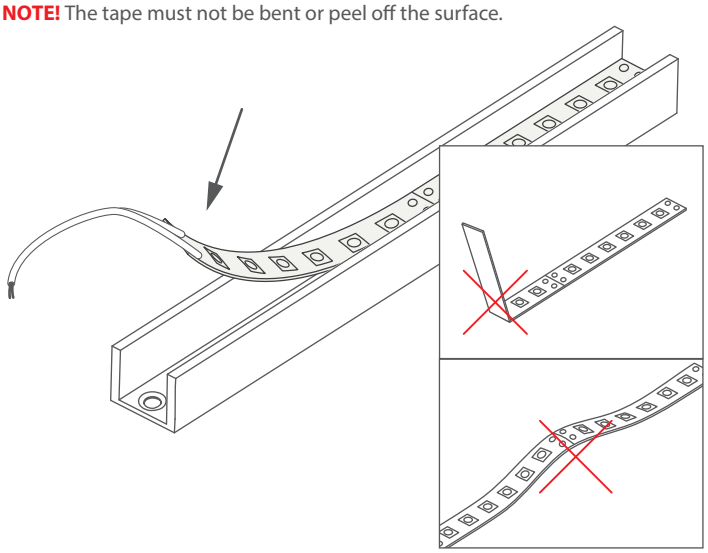

3. Lead the power cable through the drilled hole.

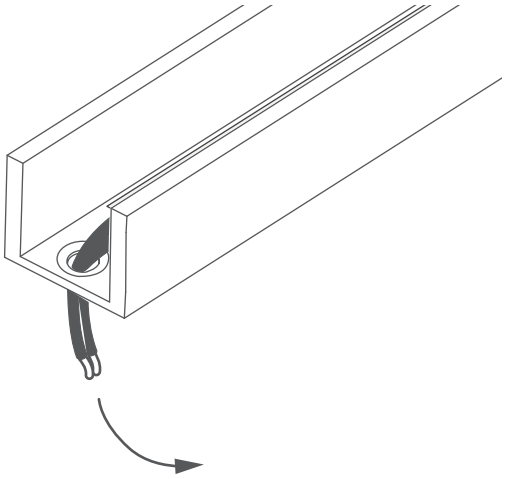

4. Connect the LED strips with wires by soldering.

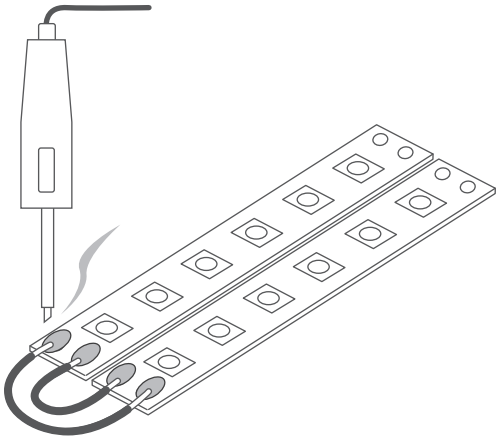

OPTIONALLY: The LED strips can also be connected using a system of LED strip connectors. More information at www.klusdesign.eu

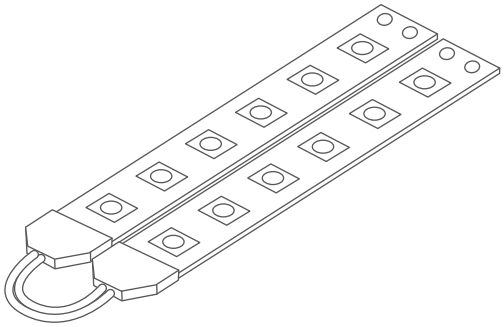

OPTIONALLY: The power cords can be led out from one pole of a given strip. This method is used to power suspended lighting fixtures.

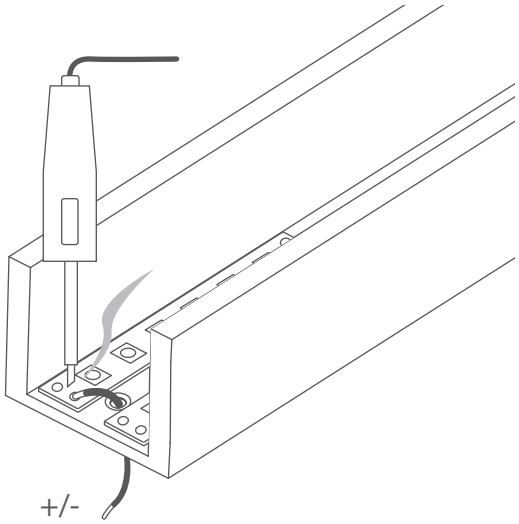

Attaching covers and end caps

1. . Insert the tip of the cover into the extrusion.

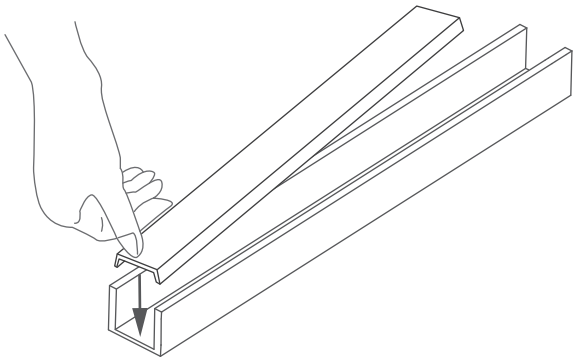

2. Press in the subsequent sections of the cover. Be careful not to bend or break the wings of the cover.

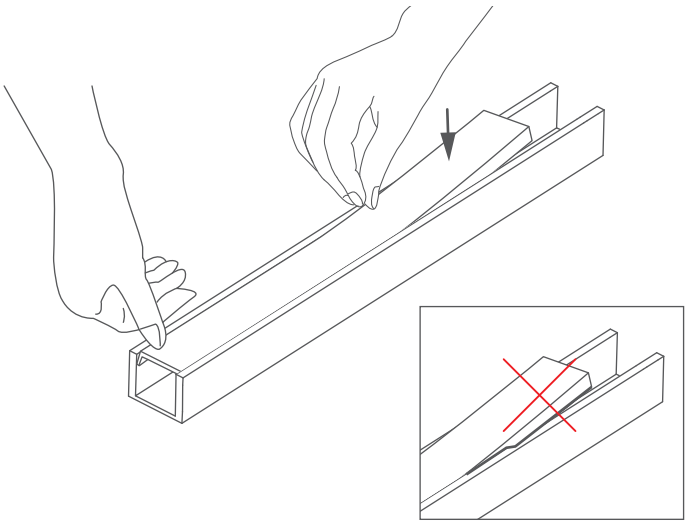

OPTIONALLY: Short sections, can also be inserted from the edge of the extrusion.

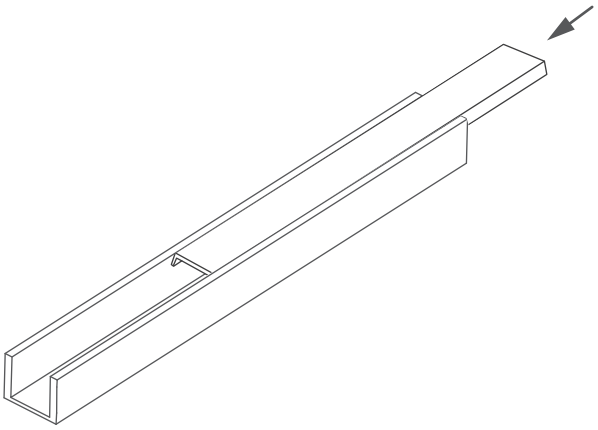

3. Insert an end cap into the edge of the extrusion. Individual extrusions have a shape that allows easy installation of dedicated end caps.
NOTE! Some end caps require an adequately shortened cover. This should be taken into account when cutting the extrusion and the cover.

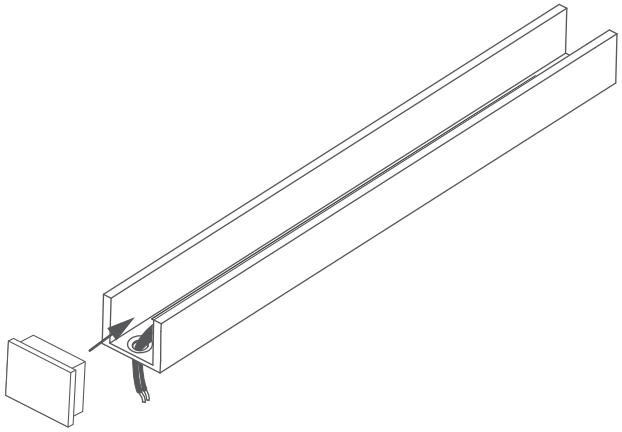

OPTIONALLY: The end caps can be attached to the extrusion using glue.

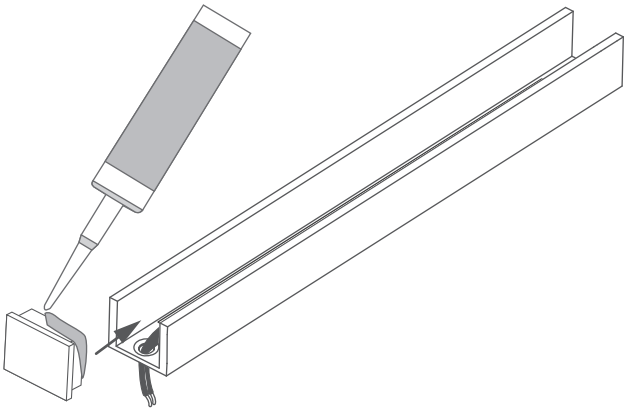

OPTIONALLY: Power cables can be run through the end caps in which case the extrusion does not need to be drilled through.

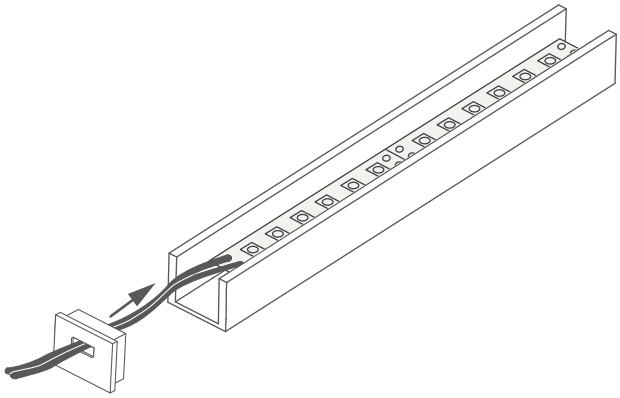

Sealing the profile

1. Clean dust and dirt from the extrusion and accessories.

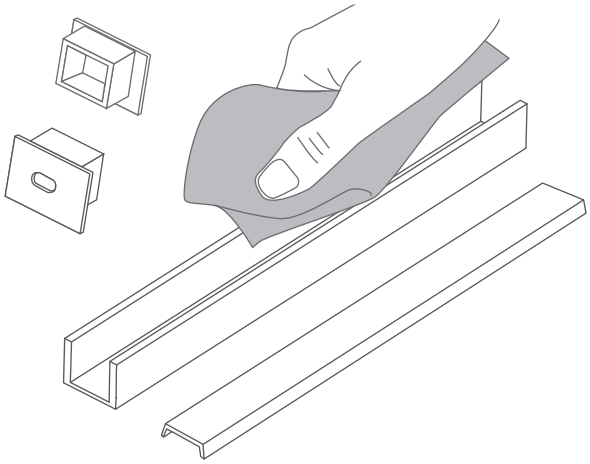

2. Attach the end caps with glue.

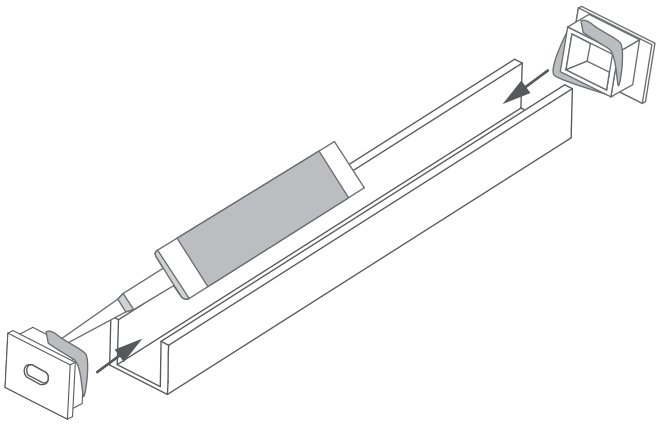

3. Apply a silicone layer to the bottom of the profile and embed the LED strip in it.
NOTE: The LED strip must have separate protection against moisture.
We recommend a silicone sleeve or heat shrink tubing if the strip in the sleeve does not fit into the extrusion.

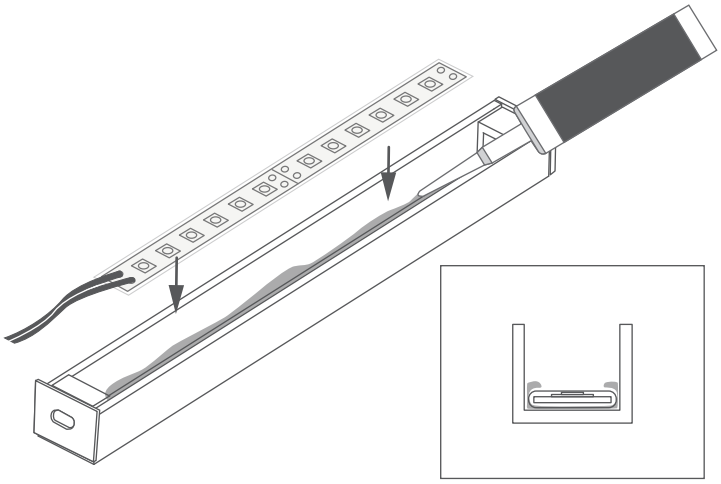

4. Apply a second layer of silicone on the extrusion walls and the end caps.

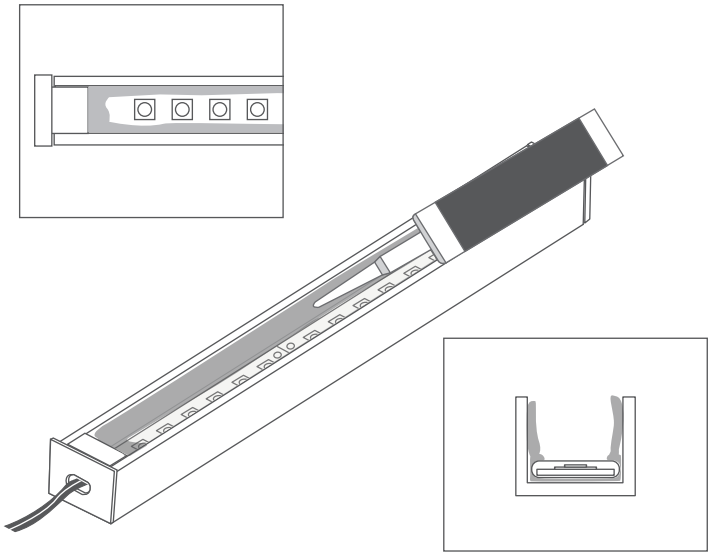

5. Remove the excess silicone with a rectangular tool (e.g. a piece of cardboard), taking care not to damage the tape. The silicone layer must be even and must not obscure the LEDs.

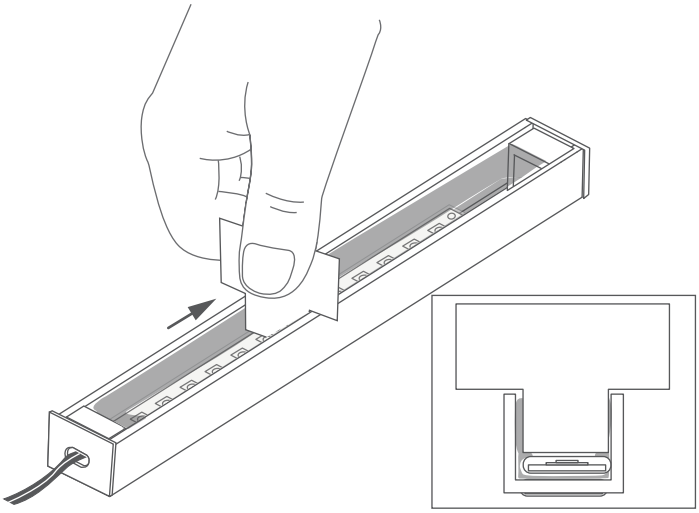

6. Insert the cover.

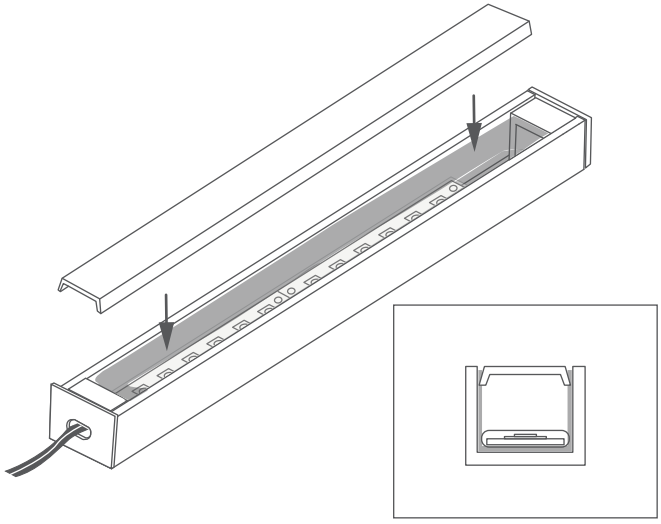

1. Slide the connectors into the small locks of the extrusion.

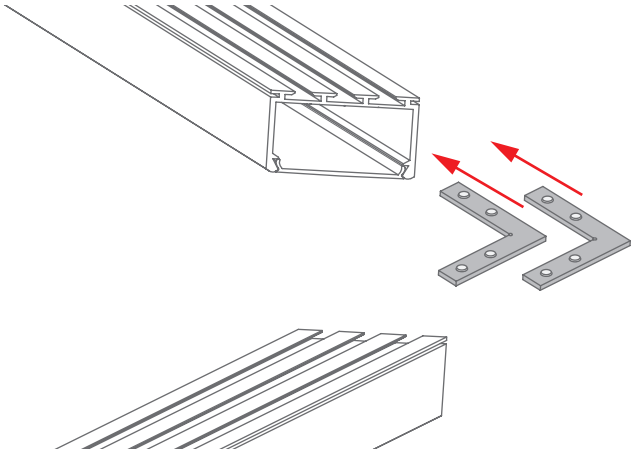

2. Tighten the two pressure screws in each connector with an Allen wrench.

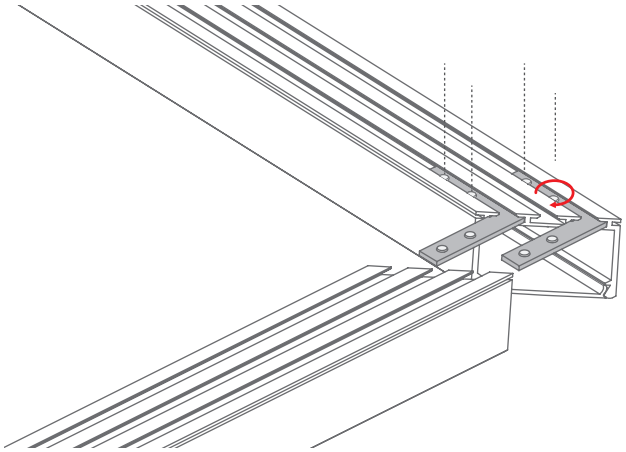

3. Slide the other half of the extrusion onto the connectors and tighten the pressure screws with an Allen wrench.

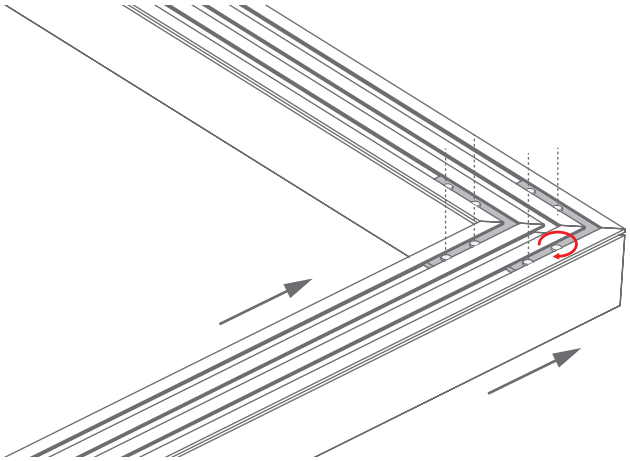

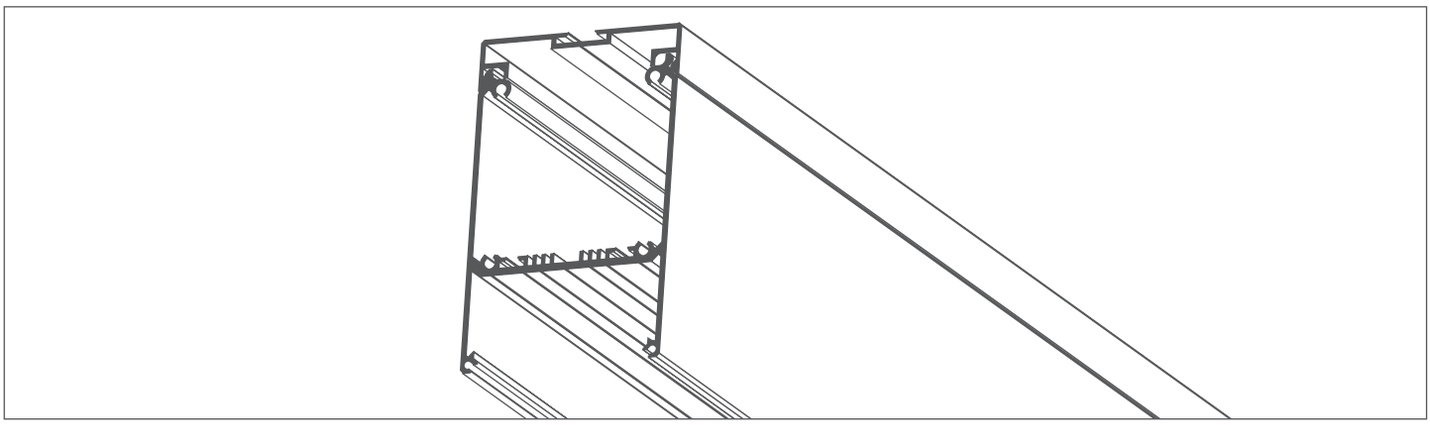

Parts needed to mount the GLADES extrusion

Mounting strip (A)

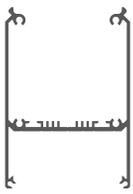

Extrusion (B)

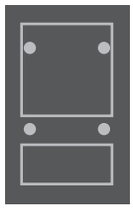

Gasket (C)

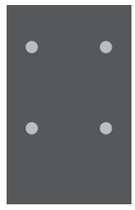

Bracket (D)

Masking cover (E)

Bolt (F)

LED strip (G)

Gland with nut (H)

Cover large (I)

Hanger (J)

Power supply bracket (K)

Plastic rod dia. 2,9 mm (L)

Plastic rod dia. 2.4 mm (M)

M5 pressure screws (N)

M3 pressure screws (O)

Tools needed for mounting:

- drill
- screwdriver
- hand saw

NOTE! All LED strips must be connected to a 12 V or 24 V power supply.

IMPORTANT: The manual presents the simplest mounting procedure.
More mounting procedures and related accessories can be found at www.klusdesign.eu

1. Drill holes in the mounting strip (A) to run the LED power from the chambers and mount the gland. For the gland drill an 8 mm diameter hole. Drill holes in the extrusion (B) to run the power cable.

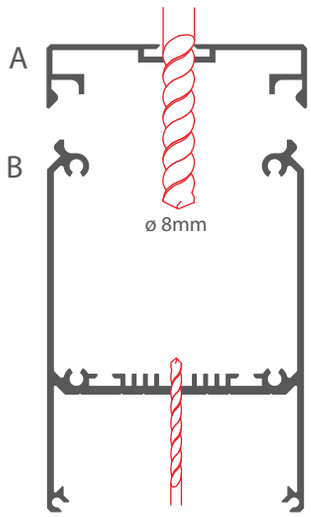

2. Bevel the channel in the mounting strip (A) over the gland hole. The drill bit diameter must be 12.5-14 mm. This will ensure correct mounting of the gland.

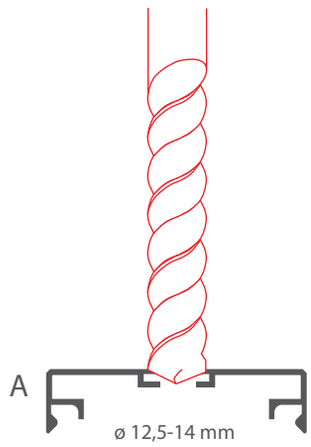

3. Install the LED strips (G) and the large cover (I) in the extrusion (B).

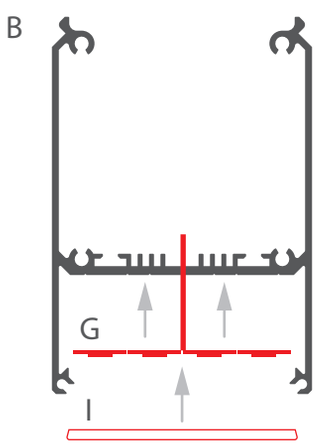

4. Attach the selected power supply to the power supply bracket (K).

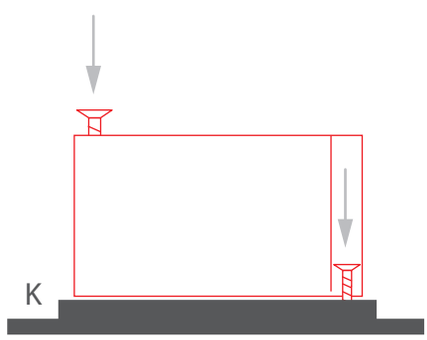

5. Insert the power supply bracket (K) in the extrusion (B).

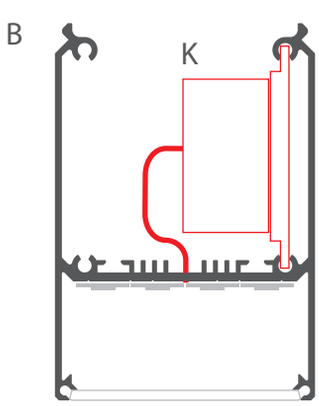

6. Secure the power supply bracket (K) by inserting one 2.4 mm plastic rod (M) into the guides on each side. Cut the rods to the required length. Next secure the rods with M3 pressure screws (O), tightening them with the Allen wrench to a min. depth of 2 cm.

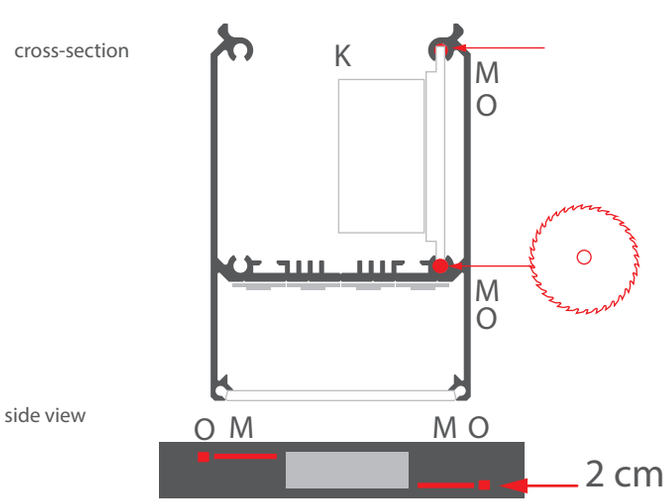

7. Insert the gland (H) in the mounting strip (A). The gland manual can be downloaded at www.klusdesign.com

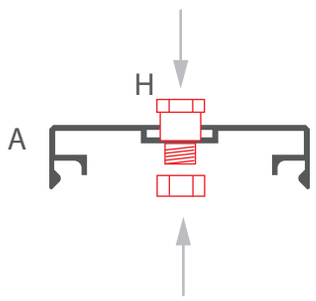

8. Install the hanger (J).The hanger manual can be downloaded at www.klusdesign.com

cross-section

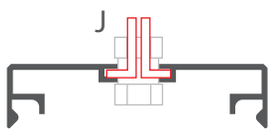

top view

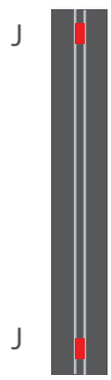

9. Suspend the mounting strip (A) using the hangers (J) and a chosen suspension system.

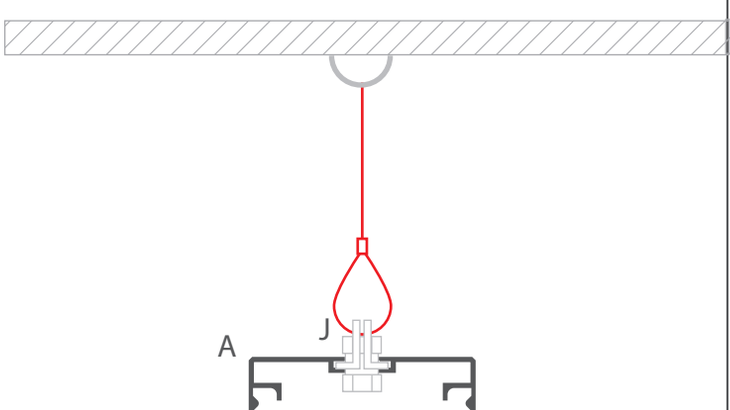

10. Feed the power cable from the ceiling and through the gland (H).

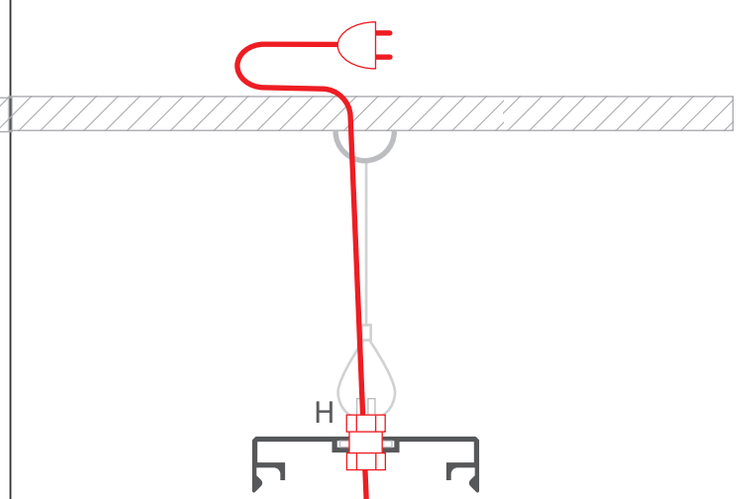

11. Assemble the extrusion (B) with the mounting strip (A). Connect the LED strips and run the cable through the gland to the power supply.

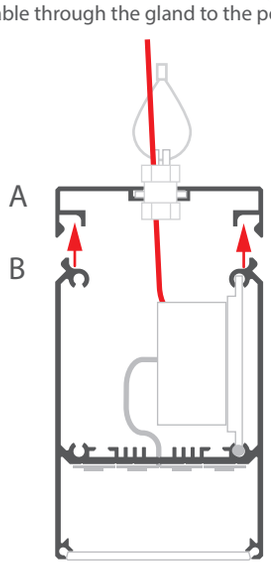

12. Secure the extrusion (B) against falling off by inserting the 2,9 mm plastic rods (L) into the guides and tightening them with M5 pressure screws (N) using the Allen wrench.

cross-section

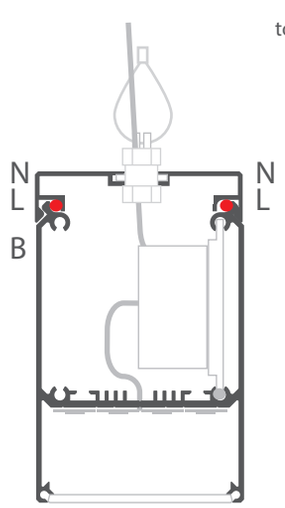

top view

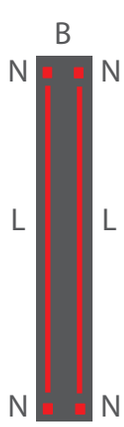

13. Insert the gaskets (C).

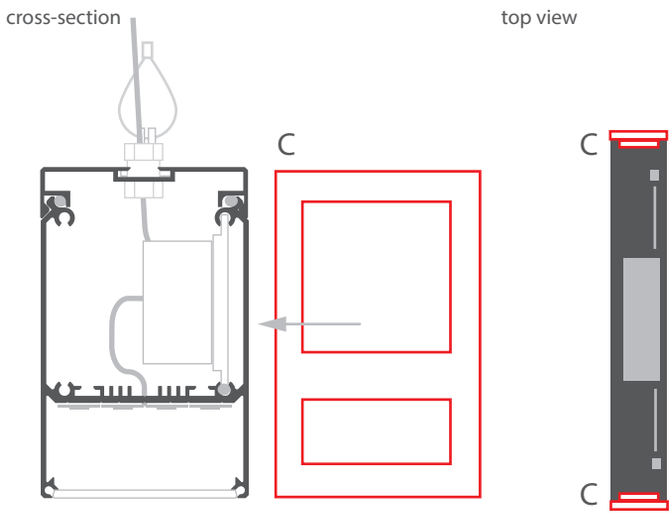

14. Put the brackets (D) in the hollows of the gaskets (C) and tighten them with the bolts (F).

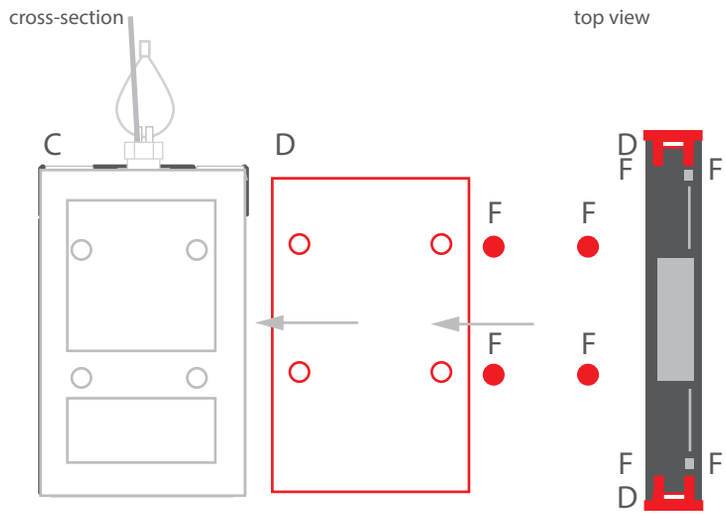

15. Insert the masking cover (E) into the collar of the gaskets (C).

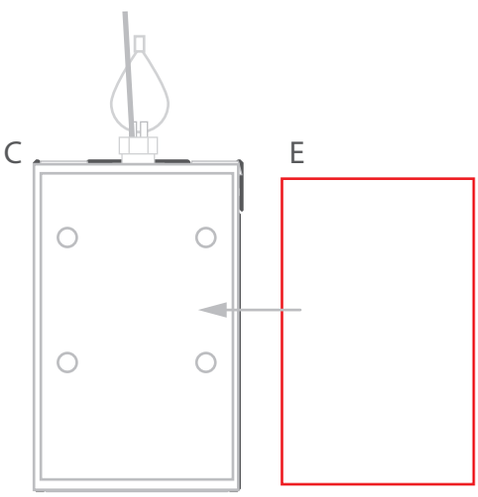

PRODUCT DESCRIPTION

- Line of light
- Lighting fixture with IP54 ingress protection, without any sealing technologies
- Lighting fixture with a mounting strip, chamber for a power supply and other electronics

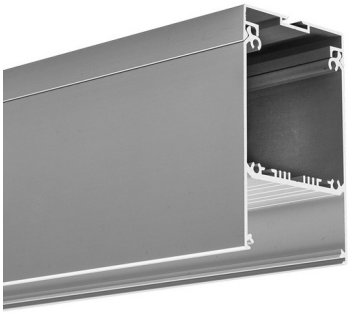

FINISH :

Silver anodized

*Custom colors available upon request

Fill empty fields

Product nr.	
Fixture type	
Company	
Job name	
Date	

TECHNICAL SPECIFICATION

Application

- for "splash-proof" lighting fixtures with high light efficiency

- possibility of building ceiling and suspended lighting lines in a straight and broken line

Assembly

- directly with bolts to the mounting surface

- with many types of suspension systems

Additional information

- it dissipates heat well

- simple construction

AVAILABLE LENGTHS

Ref. nr.	surface finish	available lengths
18036ANODA_1	Silver anodized	1000 mm
18036ANODA_2	Silver anodized	2000 mm

Ref. nr.	surface finish	available lengths
18036ANODA_3	Silver anodized	3000 mm

TECHNICAL DRAWING

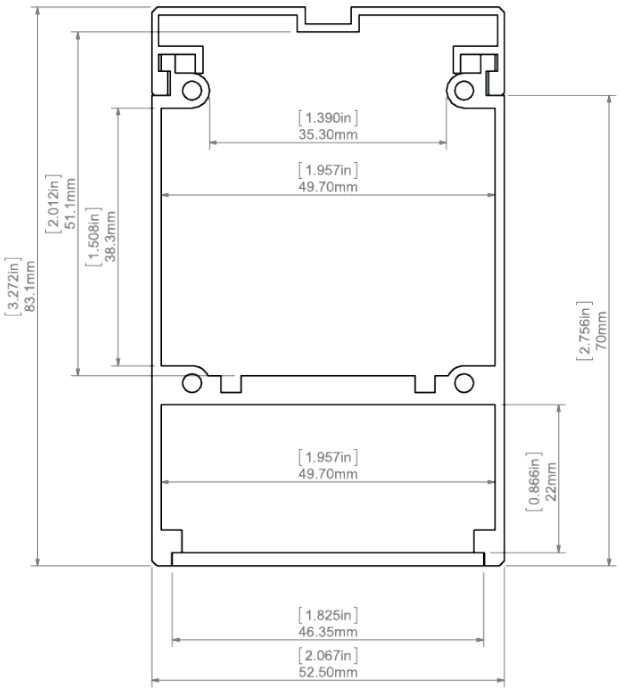

RELATED PRODUCTS

COVERS

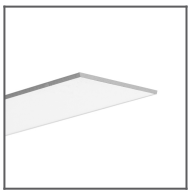

DHS clear Cover
Ref: 17063

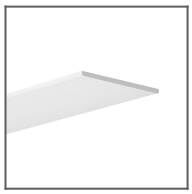

DHS frosted Cover
Ref: 17052

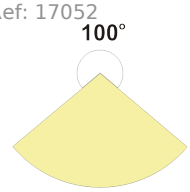

END CAPS

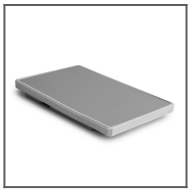

DES metalized
End cap
Ref: 42616

DESIN metalized
End cap
Ref: 24151

ACCESSORIES

PUSZ-LIN-ZD
Fastener
Ref: 42257

PUSZ-PRET-ZD
Fastener
Ref: 42251

BZP Head
Ref: 42213

BZP-ZO Head
Ref: 42214

BZP-ZZ Head
Ref: 42215

UCHO-ZD
Fastener
Ref: 42513

ZD Block
Ref: 42521

M11 Fastener set
Ref: 42609


M12 Fastener set
Ref: 42610


M13 Fastener set
Ref: 42611


M15 Fastener set
Ref: 42614


8,8x1,2 Gland
Ref: 00802


DES Gland
Ref: 42265


ZD-135 Connector
Ref: 43503


ZD-180 Connector
Ref: 43501


ZD-90 Connector
Ref: 43502


ZD-PION-135
Connector
Ref: 43505


ZD-PION-90
Connector
Ref: 43504


ZM-120
Connector
Ref: 42728


ZM-135
Connector
Ref: 42720


ZM-180
Connector
Ref: 42717


ZM-90 Connector
Ref: 42716


ZM-PION-135
Connector
Ref: 42719


ZM-PION-90
Connector
Ref: 42718

MARKETING MATERIALS


Display
P230-90071M
Ref: 90071M


Presentation set 7
Ref: 90126